SHAFT 9102 - 13'8 3/4" TO P/W

SHAFT 9101 - 13'9 1/4" TO P/W

27' 2 3/8"

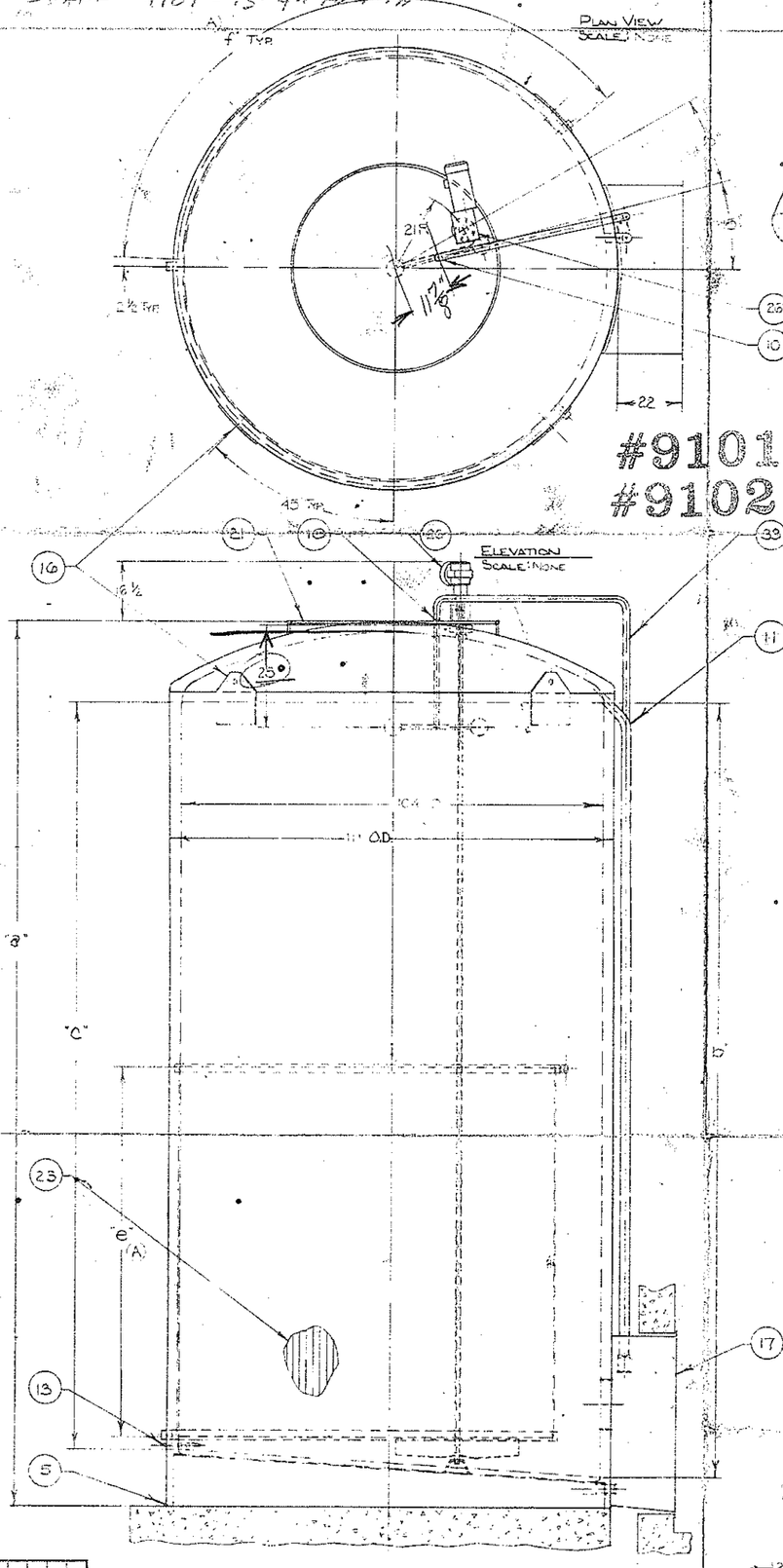

STANDARD SILO TANK:			
KEY	ITEM	DESCRIPTION	DWG. NO.
1	INNER SHELL	TOP - SOUND, DEEP DISH, LARGE KNUCKLE RADIUS, 12 GA., 304 S.S., #4 FINISH INSIDE. BOTTOM - FLAT, PITCHED 3/4" PER FT. TO OUTLET, 12 GA., 304 S.S., #4 FINISH INSIDE. SHELL - 14 GA. 304 S.S. #4 FINISH INSIDE.	
2	REINFORCING RINGS	CARBON STEEL "T" SECTIONS SPACED ON 6' CENTERS.	
3	OUTER JACKET	HEAVY GA. CARBON STEEL, PRIME PAINTED.	10478
4	INSULATION	SIDES - 3" FOAM, TOP - 3" FIBERGLAS, BOTTOM - 3" FOAM.	
5	OUTSIDE BOTTOM	TO MOUNT ON FLAT CONCRETE BASE.	10639 10276
6	MANHOLE	16 1/2" x 21" INSULATED INSIDE CLOSING DOOR W/ 1" SAMPLING VALVE.	
7	HAND GRIP	6" STAINLESS STEEL HANDLE ABOVE DOOR.	
8	OUTLET	2 1/2" #14 TRI-CLAMP FITTING W/ LASH TRI-CLAMP HOLDER & HEAVY DUTY CLAMP & GASKET (SEE ITEM "26")	
9	INLET	NONE (SEE ITEM "8")	
10	C.I.P.	KLEANZADE [illegible] UNIT WELDED IN [illegible] 2" TRI-CLAMP CONNECTION, VENTS BELOW, 2 TRI-CLAMP FITTINGS ABOVE W/ VENT SCREEN, PIPING & VALVE INCLUDED (SEE ITEMS "22" [illegible])	
11	OVERFLOW & AIR VENT	3" 45° ELL AT TOP HEAD SEAM, 3" BAYONETT CONNECTION & VENT SCREEN IN ALCOVE, PIPING TO ALCOVE [illegible] INCLUDED: (ITEMS "32", "33")	
12	RECORDER WELL	TAYLOR #26P397 (SEE ITEM "30")	10238
13	THERMOSTAT WELL	PROJECTILE TYPE FOR WHITE-RODGERS #1639-6 THERMOSTAT.	10240
14	THERMOMETER	5" DIAL, 20°-240°F RANGE IN PROJECTILE TYPE WELL.	
15	AGITATION	1 1/2" TRI-CLAMP FITTING ONLY FOR AIR AGITATION. ("SEE ITEM" 27 FOR AIR AGIT.)	
16	LIFTING LUGS	(4) TOP HEAD, (1) IN BOTTOM.	
17	ALCOVE	57 1/2" x 57 1/2" x 22" DEEP, 304 S.S., 12 GA., #4 FINISH INSIDE, FACTORY WELDED. (SEE NOTE)	
18	HOLD DOWNS	(4) FURNISHED FOR FIELD WELDING BY OTHERS.	8304-A
19	C.I.P. INTERLOCK	(1) FURNISHED EACH LOCATION.	8211
20	C.I.P. DOOR	(1) FURNISHED EACH LOCATION.	10132
21	SAFETY RAIL	3/4" CARBON STEEL PIPE.	
22	LEAK DETECTOR	1/4 IPS NIPP. 304 SS	

SILO TANK OPTIONAL ACCESSORIES:			
KEY	ITEM	DESCRIPTION	DWG. NO.
23	HEAT TRANSFER SURFACE	110 SQ. FT. S.S. CHANNEL TYPE FOR USE W/ NH_3 FLUID-FLOODED SYSTEM, (1) 2 1/2" 300# AAR C.S. COUPLING FOR INLET, (2) 2 1/2" 300# AAR C.S. COUPLING FOR OUTLETS	
24	REFRIGERATION CONTROLS	NONE	
25	OUTLET & INLET VALVE	OUTLET: 2 1/2" [illegible] DIAPHRAGM TRI-CLAMP V. COMPRESSION VALVE. INLET: NONE	
26	MECHANICAL AGITATOR	[illegible] 23 C.I.A. [illegible]	
27	AIR AGITATOR	NONE	
28	GAUGE	LIQUID SERVICE GAUGE SYSTEM COMPLETE W/ FLOWMETER, CALCULATOR, CALIBRATION IN POUNDS	
29	LEVEL CONTROLS	NONE	
30	TEMPERATURE RECORDER	NONE	
31	LADDER & CATWALK	NONE	
32	HEAT TAPE & INSULATION	INSTALLED ON C.I.P. & VENT PIPING AT THE FACTORY. (SEE NOTE)	10525
33	C.I.P. & VENT PIPING	PIPING INCLUDED FROM C.I.P. UNIT & OVERFLOW VENT ELL TO ALCOVE	

#9101
#9102

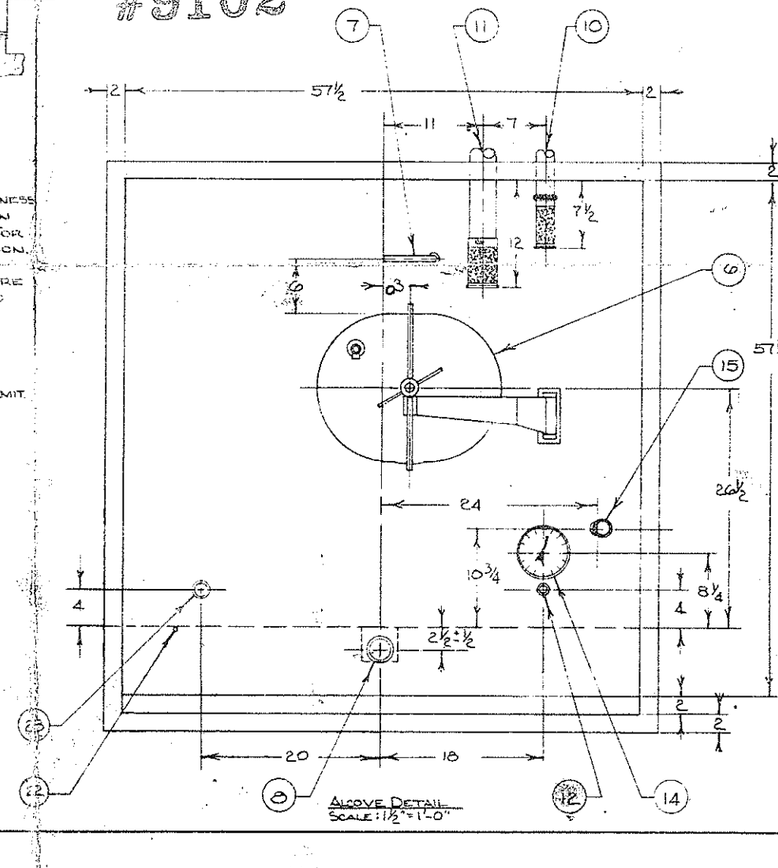

DIMENSIONS:						
CAPACITY	"a"	"b"	"c"	"e"	"f"	"g"
5,000 GAL.	170	144	137 1/2	66 1/2 (A)	115 (A)	—

NOTE:
TANK BOTTOM MUST BE FLAT AND LEVEL WITHIN 1/8" FOR BASE FLATNESS TO A TOLERANCE OF 1/16" MAY BE REQUIRED BETWEEN TANK BOTTOM AND CONCRETE BASE. CHECK CONCRETE BASE FOR FLATNESS WITH A STRAIGHT EDGE PRIOR TO TANK ERECTION. THE BASE AND SUPPORT BEAM HAVE BEEN INSPECTED PRIOR TO SHIPMENT TO INSURE THAT POST BEAM CONTACT SURFACES ARE WITHIN 1/8" OF PLANE OF SUPPORT. INSPECT TANK BASE - PRIOR TO ACCEPTANCE FROM DELIVERING CARRIER TO INSURE THAT THEY HAVE NOT BEEN DAMAGED IN TRANSIT.

NOTE:
AIR AGITATION REQUIREMENTS: 4 1/4 SCFM @ 30 PSIG.

NOTE:
ALCOVE: FACTORY WELDED IF RAIL OR HIGHWAY CLEARANCES PERMIT.

NOTE:
C.I.P. SOLUTION REQUIREMENTS: 100 G.P.M. @ 20 PSIG AT SPRAY HEAD

KEY	DATE	NO.	REVISION	CH
A	5-24-74		[illegible]	RA

WALKER STAINLESS EQUIPMENT CO.
DATE TO SHOP [illegible]
FABRICATION
APPROVED FOR

SCALE: As Noted
DATE: 3-3-71
DRAWN BY: [illegible]
REVISED: RA
12,000 GAL. SILO
GOLD BONG ICE CREAM
GREEN BAY, WI
DRAWING NUMBER: 8864
NOTE: DO NOT SCALE THIS DRAWING

All information including design details and dimensions contained herein are confidential and proprietary and must not be reproduced disclosed to others, or used in the production of parts shown, unless authorized in writing by Walker Stainless Equipment Company.

WARRANTY:

Walker Stainless Equipment Co. warrants new tanks or equipment manufactured by us to be free from defects in material and workmanship under normal use and service for a period of 1 year after shipment from the factory.

For breach of warranty of any kind, the maximum of damages to be recoverable from Walker Stainless Equipment Co. shall be limited to repair or replacement of the part or equipment which has proved defective to the satisfaction of seller to be defective, or the payment of the price or making such repair or replacement, at the option of the seller.

This warranty is expressly in lieu of all other warranties, expressed or implied, and all other obligations and liabilities on our part. Any warranty of merchantability is expressly excluded. We neither assume nor authorize any other persons to assume for us any liability in connection with the sale of our products and no other warranty will be honored unless in writing and signed by an officer of the corporation. This warranty shall not apply to any product of our manufacture which has been repaired or altered outside our factory, or which in our opinion has been subject to misuse, negligence or accident. Seller will not assume any charges for repairs made during warranty by anyone other than Walker Stainless. Also seller assumes no liability or responsibility for transportation to and from repair point, nor any loss of time due to repair. This warranty does not cover components of other manufacturers beyond such warranty as is made by such manufacturer.

Any action for breach of warranty shall be commenced within one (1) year or said breach or be forever barred.

TANK #4 & 5