251B364

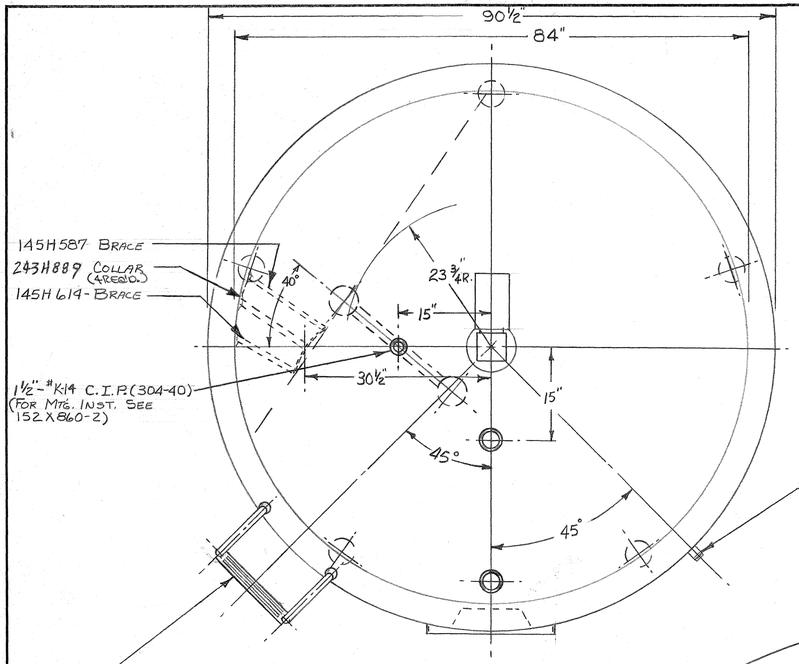

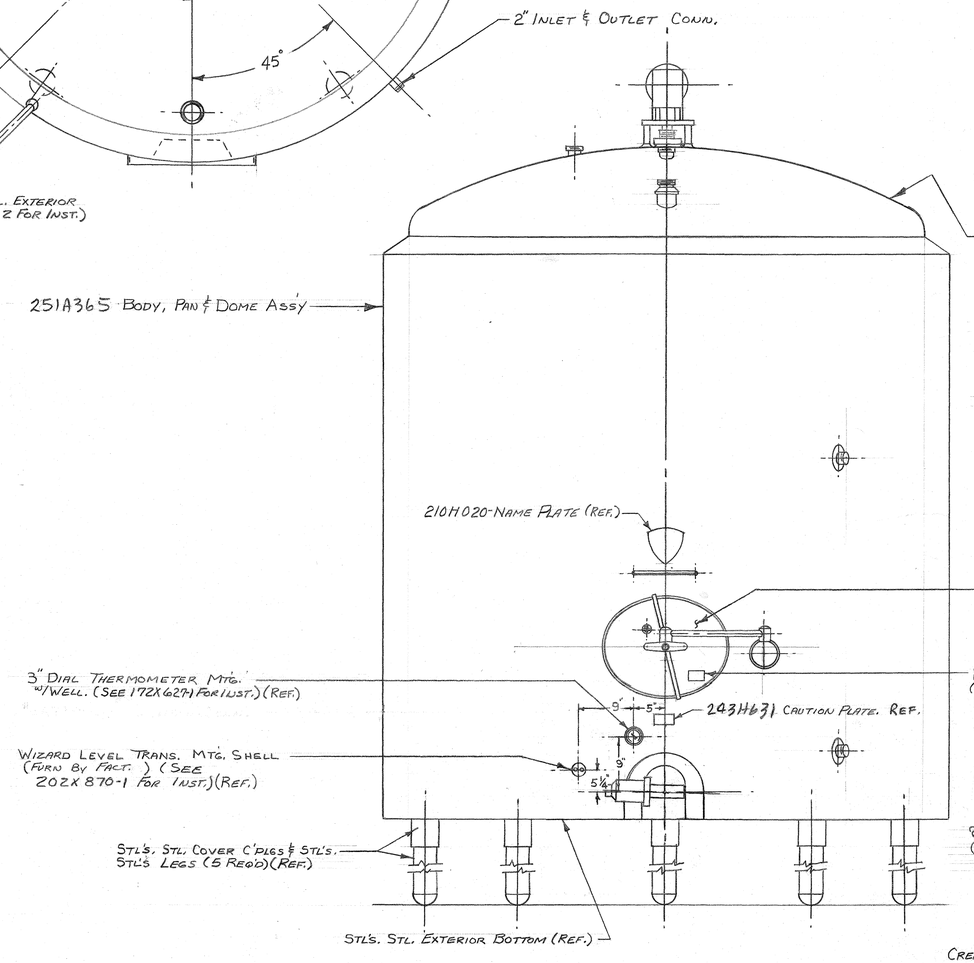

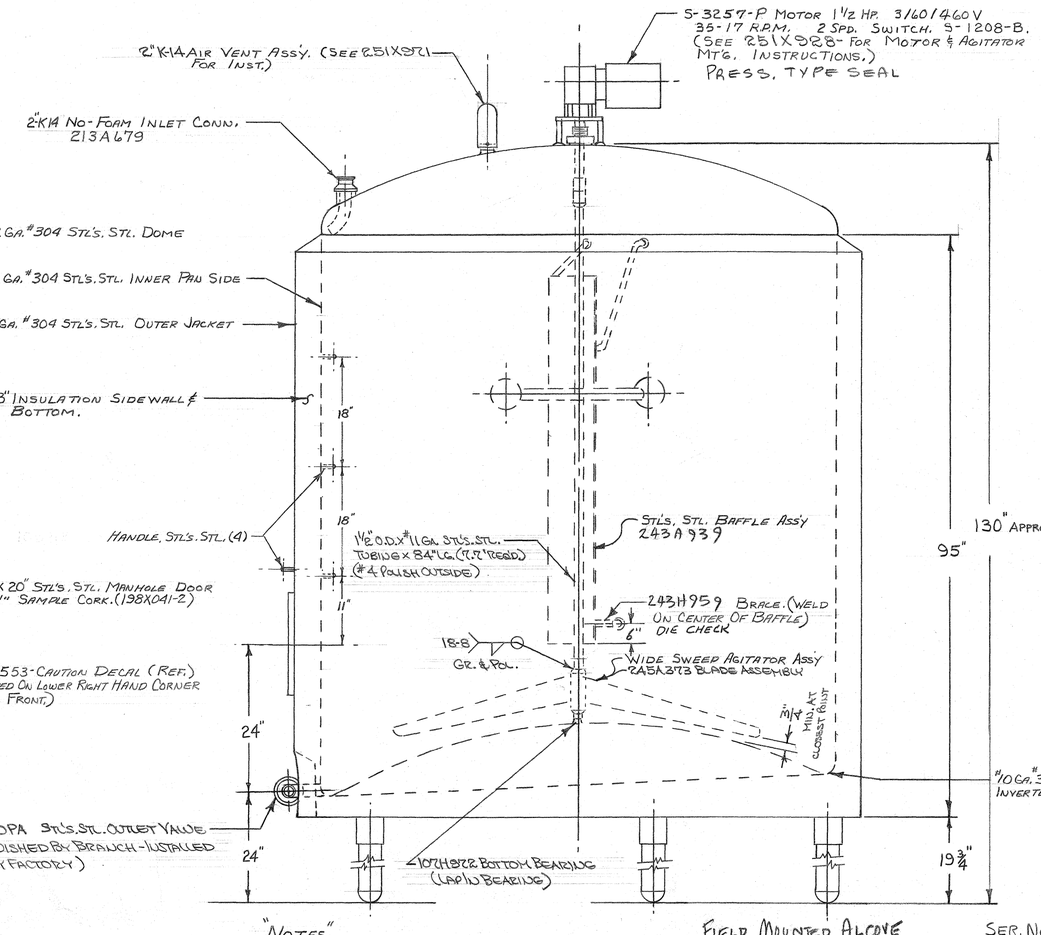

AFFILIATE DRAWINGS
152X860-2
172X627-1
181X962
202X870-1
251X971
251X988

CREAMLAND DAIRIES, INC.
FIRST USED ON BR. ORDER 34-13482

"NOTES"
ALL TYPE #304 STL'S. STL. WELDED CONSTRUCTION
#4 FINISH INSIDE & OUTSIDE W/ STRIPE POLISH SEAMS.

FIELD MOUNTED ALONE
SEE 10W-P-327618

SER. No 9662 & 9664

K1

DATE	LOC.	NO.	C.N.NO.	REVISIONS	BY
8-25-69			40861	DWG. REVISED	NDH
8-18-69			40843	REL. FOR PROD.	NS

UNLESS OTHERWISE SPECIFIED
SURFACE ROUGHNESS √ NOT TO EXCEED ——— ON MACHINE FINISHED SURFACES
ALL DIMENSIONS IN INCHES
MACHINED FILLETS .005 TO .015 R
BURR SHARP EDGES .005 TO .015.
TOLERANCE ON ANGLES ± ½°
TOLERANCES FOR MACHINING:—
REAMED HOLES ± .0005
DEC. DIM'S ± .005
FRACTIONAL DIM'S ± 1/64

ST REGIS CP DIVISION

GENERAL ASSEMBLY - WIDE SWEEP AGITATOR, 70 SQ. FT WATER. 2000 GAL. MODEL "R1B" M.P TANK.

MATERIAL AS NOTED | FIN. | ASSEM. | FOLIO | SCALE — | REQ. 1 | DWG. No. 251B364
DATE 6-20-69 | DRAWN BY NNS | CHECKED BY | TRACED BY

THIS PRINT IS LOANED SUBJECT TO RETURN UPON DEMAND AND UPON THE EXPRESS CONDITION THAT IT WILL NOT BE USED DIRECTLY OR INDIRECTLY IN ANY WAY DETRIMENTAL TO OUR INTERESTS. — ST REGIS CP DIVISION

238B166